SINOTRUK
12JS200T GEARBOX
SPARE PARTS CATALOG

Edited and provided by

CHINA HEAVY TRUCK PARTS STORE CO LTD

Edited by CHINA HEAVY TRUCK PARTS STORE CO LTD, www.sinotruk-parts-store.com
Contact: Eric Jin, email: eric@sinotruk-parts-store.com, telephone: 0086 15554163618.

INDEX

Manipulation device	Page 3
Single H valve	Page 5
Reverse idler shaft	Page 6
Second shaft	Page 7
Deputy gearbox shifting cylinder	Page 8
Deputy gearbox driving gears	Page 9
First shaft assy	Page 10
Middle shaft	Page 11
Upper cover	Page 12
Clutch & transmission housing	Page 14
Vice box main shaft	Page 16
Vice box middle shaft	Page 17
Rear cover	Page 18
Air filter	Page 20

Edited by CHINA HEAVY TRUCK PARTS STORE CO LTD, www.sinotruk-parts-store.com
Contact: Eric Jin, email: eric@sinotruk-parts-store.com, telephone: 0086 15554163618.

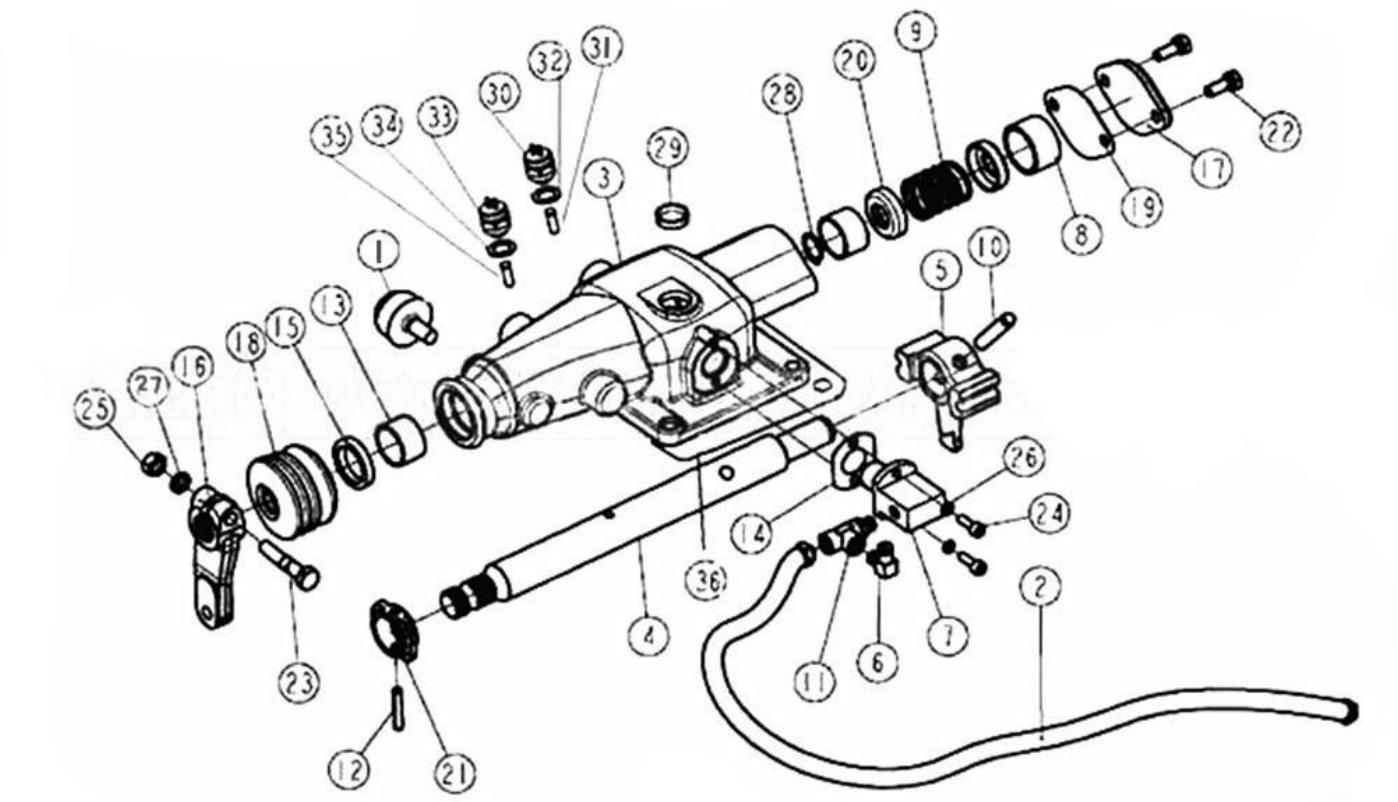

Manipulation device		
FAST Transmission 12JS200T		
sequence	name	part number
1	Vent plug	15276
2	Pipe assembly	55534
3	Manipulation device housing	12jsl60t — 1703015
4	Lateral shift lever	12jsl60t — 1703017
5	Dial head	12jsl60t — 1703018
6	90 ° shift joints	12jsl60t — 1703021
7	Pneumatic control valve	12jsl60t — 1703022
8	Limit sets	12jsl60t — 1703024
9	Compression springs	12jsl60t — 1703027
10	Cylindrical pin	c03030
11	Tee	c03052
12	Elastic cylindrical pin	c09035
13	Lateral shift lever bushing	f91345
14	Double H valve gasket	f91353
15	Seal	f91444

Edited by CHINA HEAVY TRUCK PARTS STORE CO LTD, www.sinotruk-parts-store.com
Contact: Eric Jin, email: eric@sinotruk-parts-store.com, telephone: 0086 15554163618.

16	lrc external shift arm	f96035
17	Side plate	f99666—2
18	Dust cover	f99669
19	End gasket	f99672—2
20	Spring seat	f99673—1
21	Low reverse gear switch control block	f99681
22	Hexagon head bolt and spring washer assemblies	q1420822
23	Hexagon head bolt	q151b1050
24	Hexagon socket head cap screws	q218b0618
25	I Type hex nut	q341b10
26	Spring washer	q40306
27	Spring washer	q40310
28	Shaft circlip	q43120
29	Bowl stuffed pieces	q72224
30	Pressure Switch	0041ks
31	Switch starting pin	f99702
32	Gasket	q72318t3
33	Pressure Switch	0068ds
34	Gasket ring	c03015
35	Switch starting pin	15899
36	Manipulate liner	1642

Edited by CHINA HEAVY TRUCK PARTS STORE CO LTD, www.sinotruk-parts-store.com
Contact: Eric Jin, email: eric@sinotruk-parts-store.com, telephone: 0086 15554163618.

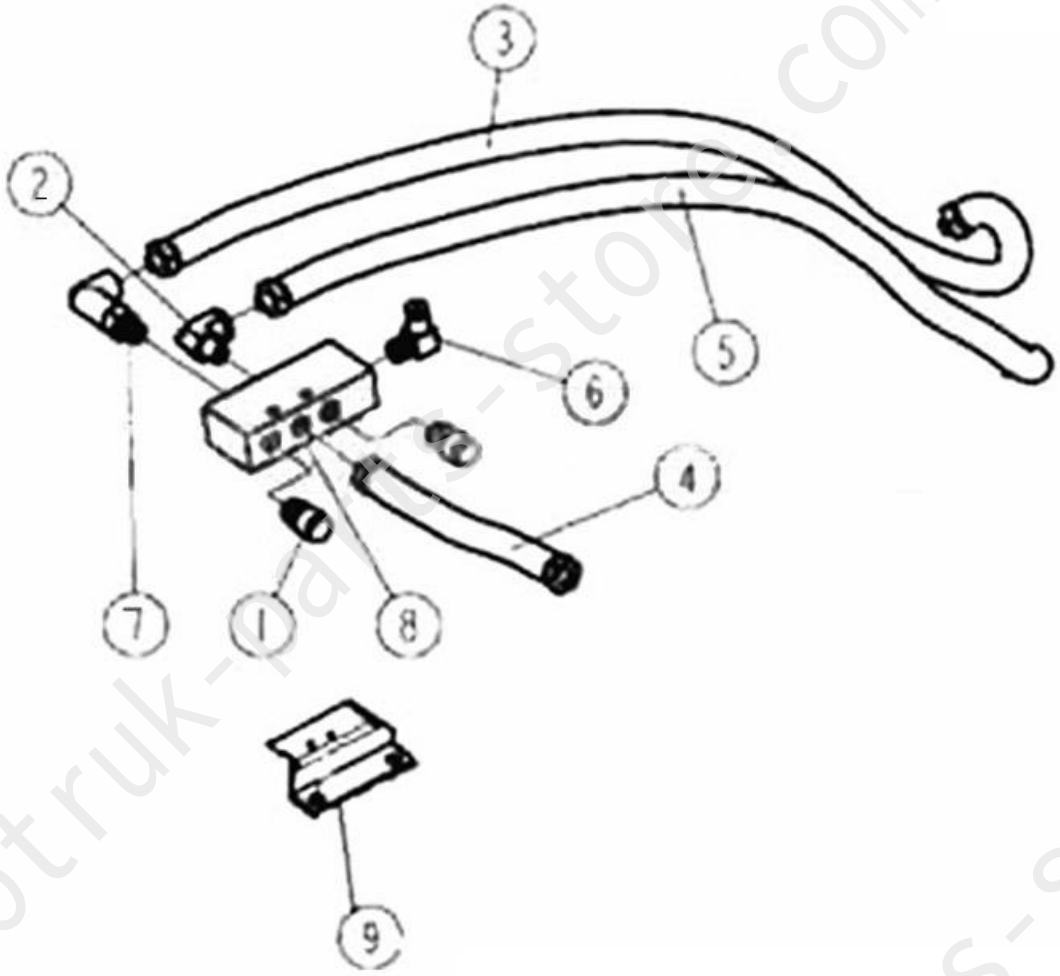

Single H valve		
FAST Transmission 12JS200T		
sequence	name	part number
1	Vent plug	7935
2	90 ° elbow joint	12845
3	Pipe assembly	55511
4	Pipe assembly	55512
5	Pipe assembly	55521
6	90 ° elbow joint	12jsl60t-1703021
7	90 ° elbow joint	12jsl60t-1703051
8	Single H valve	12jsl60t — 1703052
9	Single H valve seat	12jsl60t — 1702095

Edited by CHINA HEAVY TRUCK PARTS STORE CO LTD, www.sinotruk-parts-store.com
Contact: Eric Jin, email: eric@sinotruk-parts-store.com, telephone: 0086 15554163618.

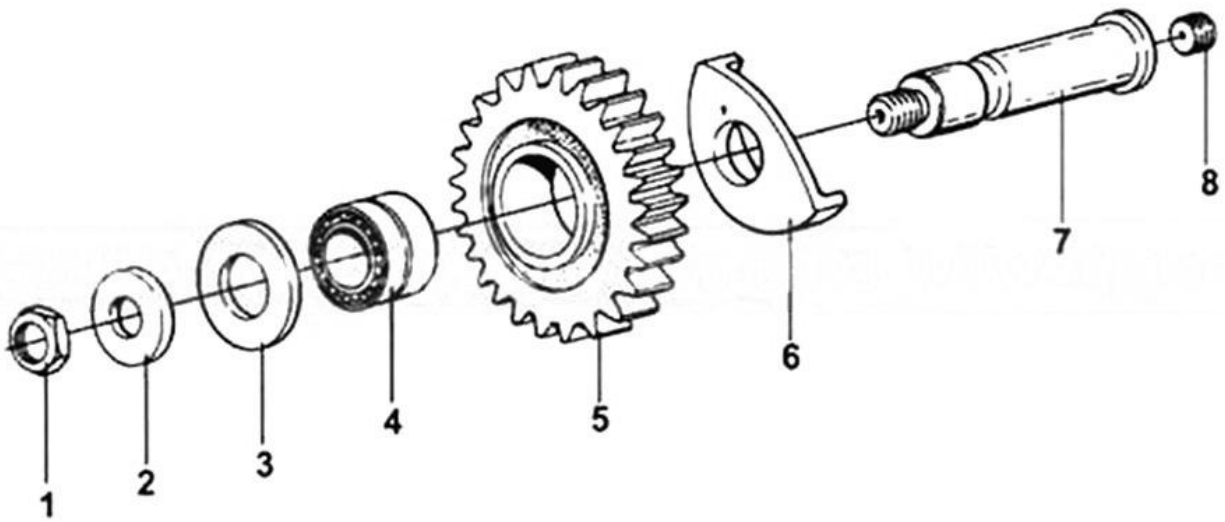

Reverse idler shaft		
FAST Transmission 12JS200T		
sequence	name	part number
1	Nuts m201.5	gb890—86
2	Reverse idler shaft washer	js220—1701088
3	Reverse thrust washer	js220—1701087
4	Needle roller bearings	dsl00—1701085
5	Reverse idler gear	12js200t — 1701083
6	Reverse gear washer	12jsl60t — 1701084
7	Reverse idler shaft	js220—1701082
8	Level set screws	q2821212

Edited by CHINA HEAVY TRUCK PARTS STORE CO LTD, www.sinotruk-parts-store.com
Contact: Eric Jin, email: eric@sinotruk-parts-store.com, telephone: 0086 15554163618.

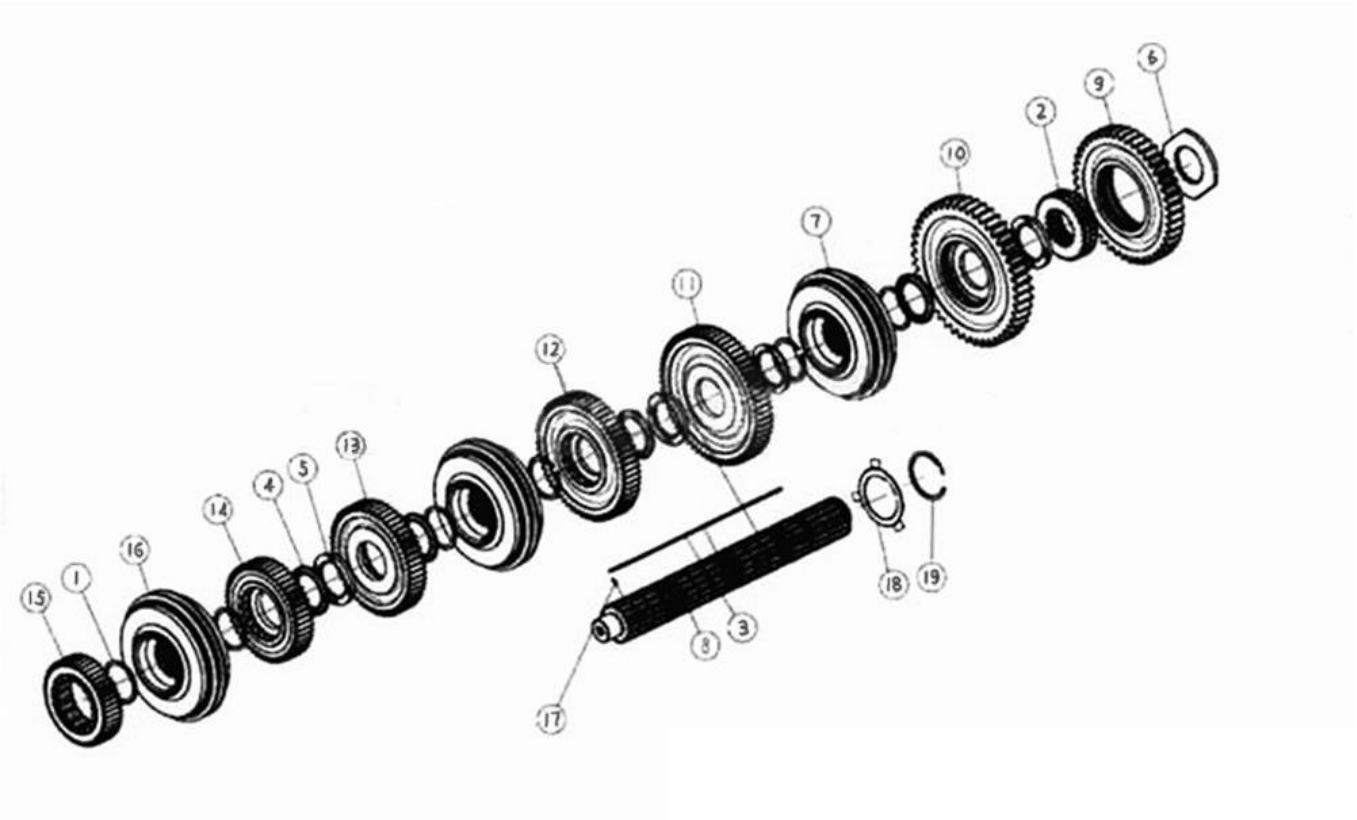

Second shaft		
sequence	name	part number
1	Snap ring	16763
2	Sleeve	12jsl60t — 1701108
3	Second shaft hex key	12jsl60t — 1701121
4	Second shaft gear splined pad	12jsl60t — 1701122
5	Second shaft gear spacer	12jsl60t — 1701123
6	Second shaft reverse gear shim	12jsl60t — 1701125
7	First & second gear synchronizer assembly	12jsl60t — 1701170
8	Second shaft	12js200t — 1701105
9	Second shaft reverse gear	12js200t — 1701110
10	First gear of second shaft	12js200t-1701111
11	Second gear of second shaft	12js200t — 1701112
12	Third gear of second shaft	12js200t — 1701113
13	Forth gear of second shaft	12js200t — 1701114
14	Fifth gear of second shaft	12js200t — 1701115—1
15	First shaft gear	12js200t — 1701116—1
16	Third & forth gear synchronizer assembly	jsl30t — 1701180
17	Elastic cylindrical pin	q5280310
18	Spindle gear washer	12jsl60t — 1701106
19	Reverse gear snap ring	12jsl60t — 1701107

Edited by CHINA HEAVY TRUCK PARTS STORE CO LTD, www.sinotruk-parts-store.com
Contact: Eric Jin, email: eric@sinotruk-parts-store.com, telephone: 0086 15554163618.

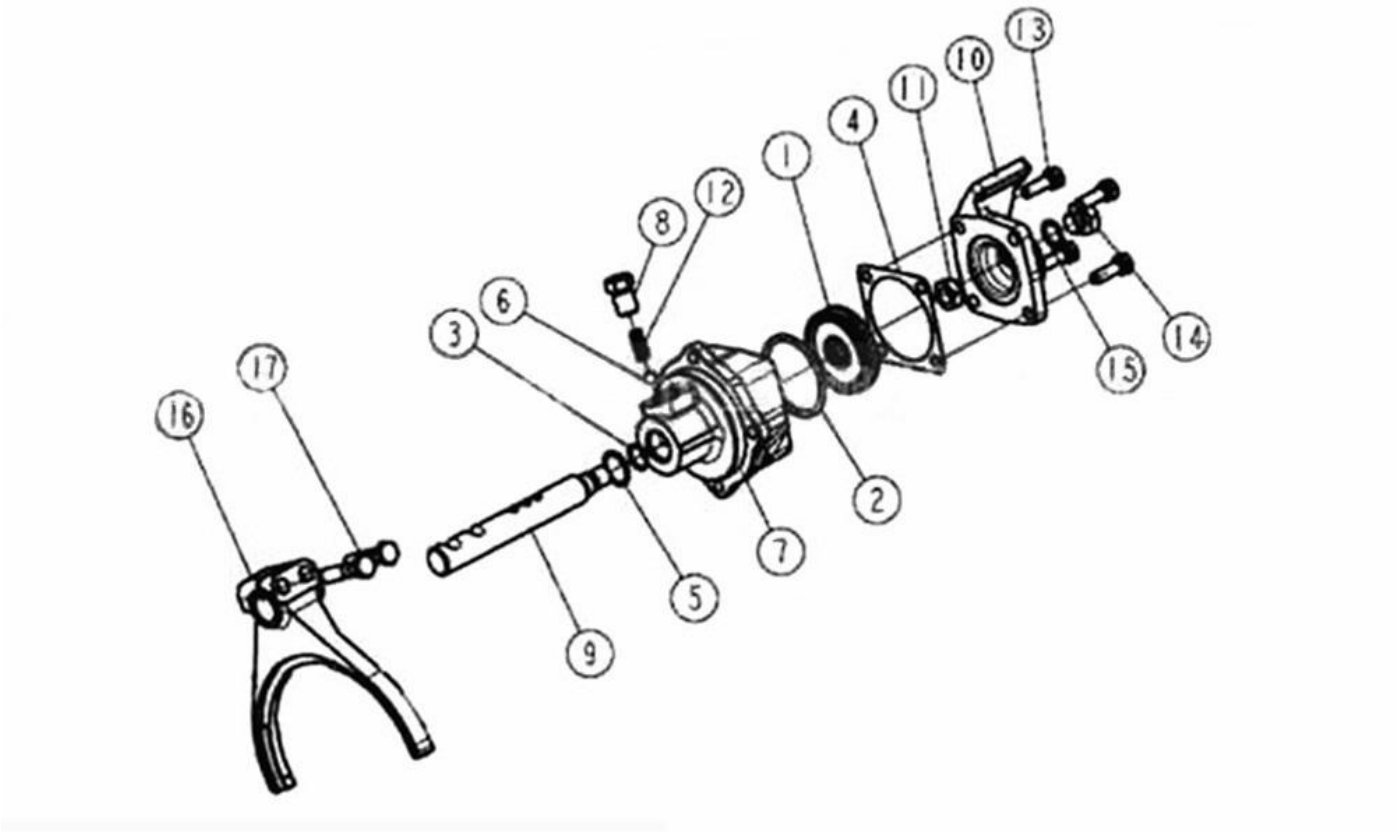

Deputy gearbox shifting cylinder		
sequence	name	part number
1	Range gear cylinder piston	14341
2	0-ring	14344
3	I type sealing ring	14345
4	Cylinder head gasket	14349
5	0-ring	14765
6	Steel ball	10g100bgb—t308
7	Range gear cylinder	12jsl60t — 1707062
8	Plugs	12jsl60t — 1707063
9	Range gear shifting fork shaft	12jsl60t — 1707061
10	Deputy gearbox shifting cylinder head	f99857
11	Hexagon nuts	gb890—80 — m16x1.5
12	Positioning spring	j80—1702080
13	Hexagon head bolt	q1421032m
14	Pressure Switch	0069gs
15	Fold copper washers	x11511
16	Deputy gearbox shifting fork	16775
17	Hexagon head bolt	17181250

Edited by CHINA HEAVY TRUCK PARTS STORE CO LTD, www.sinotruk-parts-store.com
Contact: Eric Jin, email: eric@sinotruk-parts-store.com, telephone: 0086 15554163618.

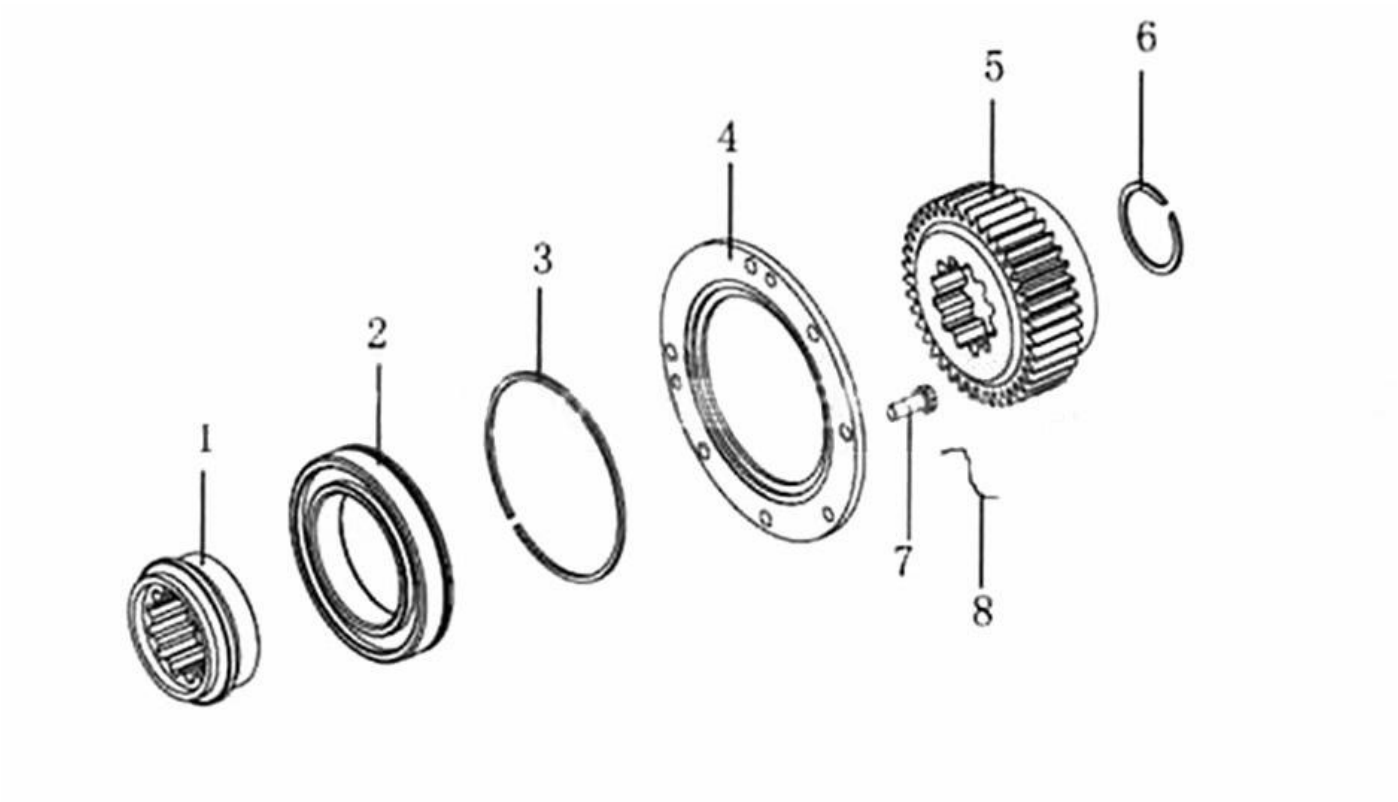

Deputy gearbox driving gears		
FAST Transmission 12JS200T		
sequence	name	part number
1	Bearing support	12jsl60t — 1701124
2	Groove ball bearings	50118
3	Snap ring	c01019
4	Deputy gearbox bearing positioning plate	js220—1707031
5	Deputy gearbox driving gears	12js200t — 1707030
6	Snap ring	16763
7	Hexagon head bolt	c09032
8	Iron wire	1819

Edited by CHINA HEAVY TRUCK PARTS STORE CO LTD, www.sinotruk-parts-store.com
Contact: Eric Jin, email: eric@sinotruk-parts-store.com, telephone: 0086 15554163618.

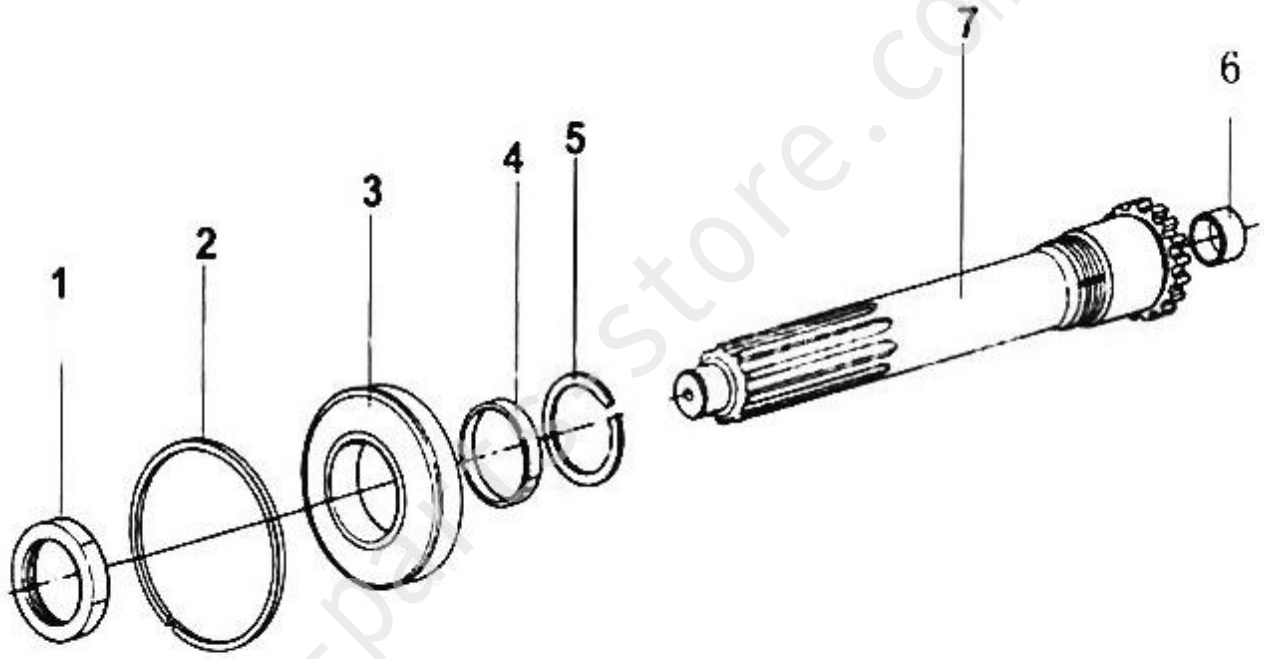

First shaft assy		
FAST Transmission 12JS200T		
sequence	name	part number
1	Nut	jsl80a — 1701036
2	Snap ring	c01020
3	Single row radial ball bearings	150212k
4	Gear septum	16463
5	Snap ring	14750
6	Second shaft bushing	16566
7	First shaft	jsl80a — 1701030

Edited by CHINA HEAVY TRUCK PARTS STORE CO LTD, www.sinotruk-parts-store.com
Contact: Eric Jin, email: eric@sinotruk-parts-store.com, telephone: 0086 15554163618.

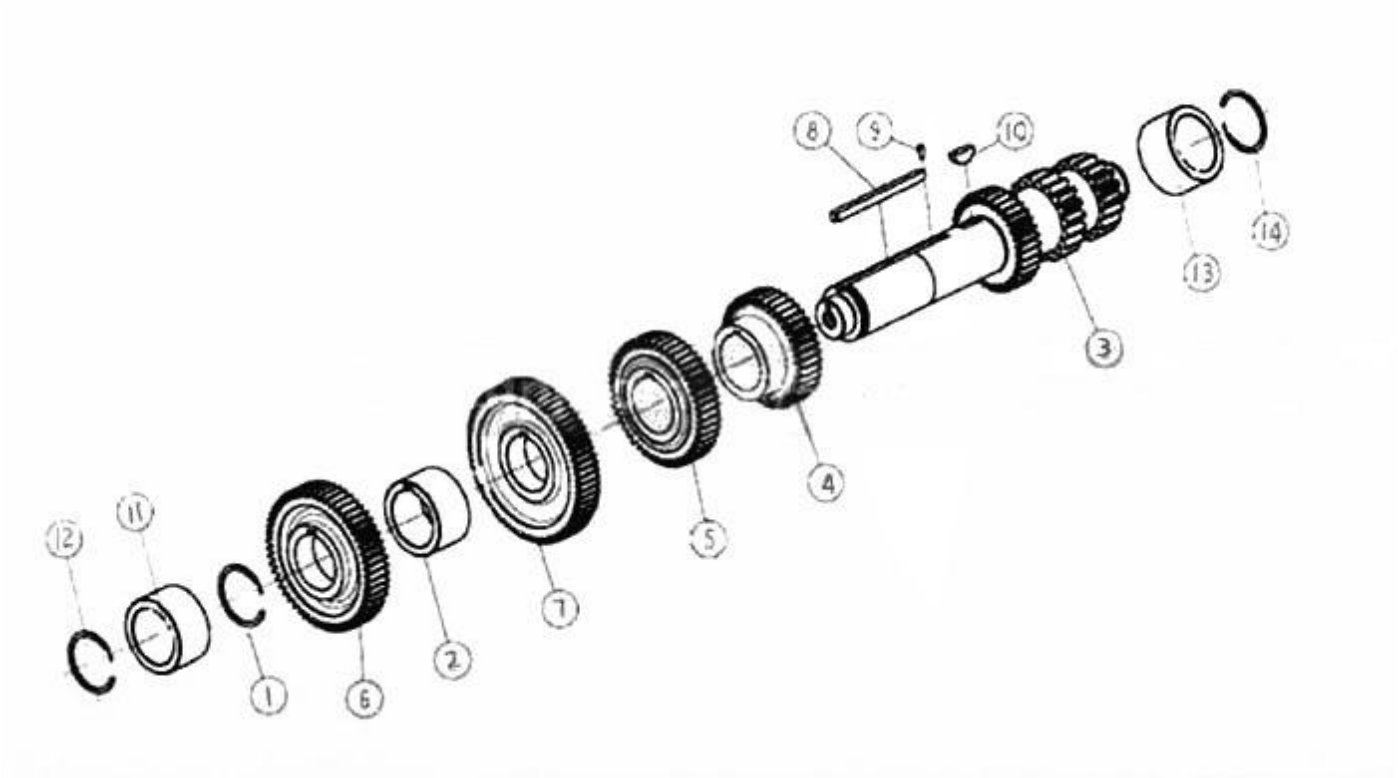

Middle shaft		
FAST Transmission 12JS200T		
sequence	name	part number
1	Middle shaft snap ring	19198
2	Spacer	12jsl60t — 1701057
3	Middle shaft	12js200t — 1701048
4	Middle shaft third gear	12js200t — 1701050
5	Middle shaft fourth gear	12js200t — 1701051
6	Middle shaft transmission gear	12js200t — 1701052
6	Middle shaft transmission gear	12js200t — 1701056
7	Middle shaft 5th gear	12js200t — 1701056
7	Middle shaft 5th gear	12js200t — 1701052
8	Quartet key of middle shaft	16js200t — 1701055
9	Elastic cylindrical pin	q5280514
10	Woodruff key	×— 6 — e
11	Cylindrical Roller Bearings	192309e
12	Snap ring	c01021
13	Cylindrical Roller Bearings	102309e
14	Shaft circlip	q43145

Edited by CHINA HEAVY TRUCK PARTS STORE CO LTD, www.sinotruk-parts-store.com
Contact: Eric Jin, email: eric@sinotruk-parts-store.com, telephone: 0086 15554163618.

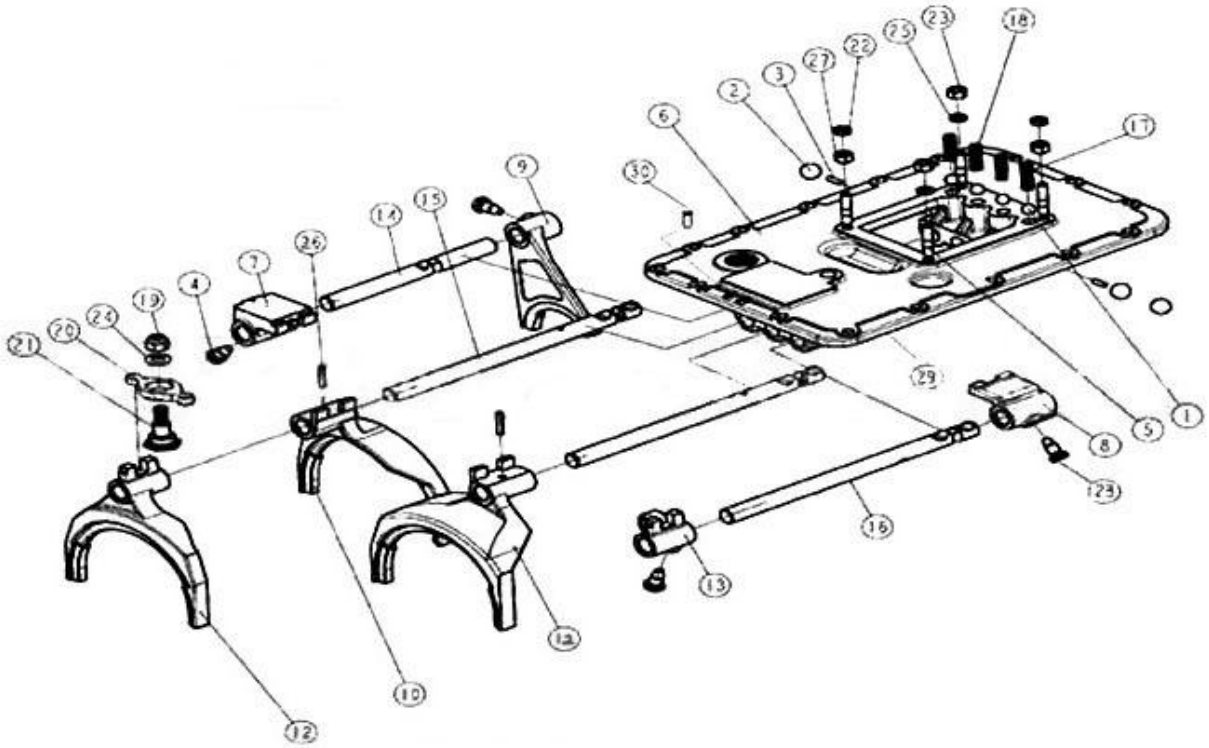

Upper cover		
FAST Transmission 12JS200T		
sequence	name	part number
1	Steel ball	12.7h100bgb-t308
2	Steel ball	19.05g100bgb-t308
3	Shifting fork interlock pin	1634
4	Shifting fork locking screw	3220
5	Stud	11066
6	Upper cover	12jsl60t — 1702015
7	Reverse gear guide block assembly	12jsl60t — 1702050
8	Fifth sixth block	12jsl60t — 1702054
9	Reverse gear shifting fork	12js160t — 1702055
10	First second shifting fork	12jsl60t — 1702056
12	Fifth sixth shifting fork	12jsl60t — 1702058
12	Fifth sixth gear shifting fork	12jsl60t — 1702058—2
13	Fifth sixth shifting block	12jsl60t — 1702054
14	Reverse gear fork shaft	12jsl60t — 1702063
15	First second third and forth shifting shaft	12jsl60t — 1702064
15	First second third and forth shifting shaft	12jsl60t — 1702064—1

Edited by CHINA HEAVY TRUCK PARTS STORE CO LTD, www.sinotruk-parts-store.com
Contact: Eric Jin, email: eric@sinotruk-parts-store.com, telephone: 0086 15554163618.

16	Fifth sixth shifting shaft	12jsl60t — 1702066
17	Compression spring	f96084
18	Compression spring	f96085
19	Nut	gb889—80 — m12xl.25
20	Swing head	jsl00a — 1702072
21	Bearing axle pin	jsl00a — 1702073
22	Hexagon thin nuts	q351b10
23	Nuts	q361b10
24	Flat Washers	q40112
25	Spring washer	q40310
26	Elastic cylindrical pin	q5280630
27	Hex nuts	x — 1—603
28	First second third and forth shifting shaft	jan — 20
29	Upper cover gasket	12jsl60t — 1702016
30	Cylindrical pin	q5211026

Edited by CHINA HEAVY TRUCK PARTS STORE CO LTD, www.sinotruk-parts-store.com
Contact: Eric Jin, email: eric@sinotruk-parts-store.com, telephone: 0086 15554163618.

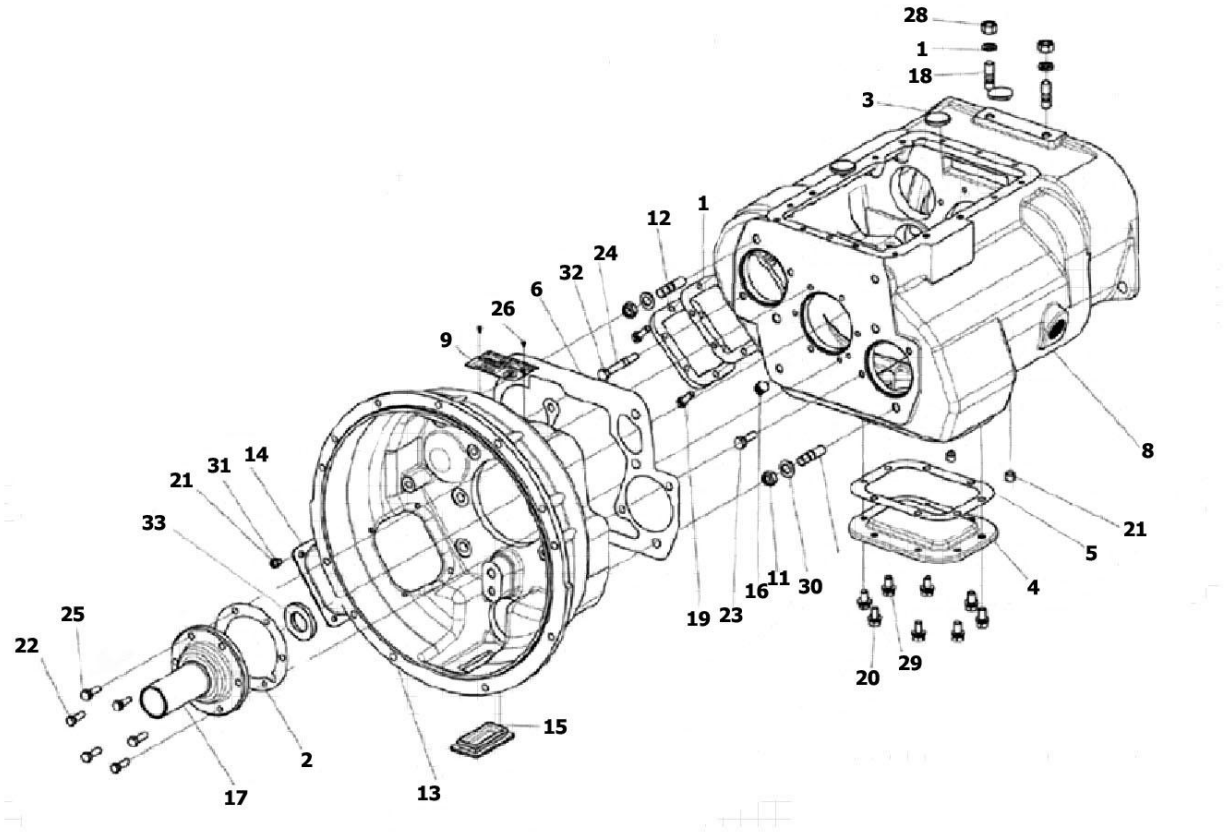

Clutch & transmission housing		
FAST Transmission 12JS200T		
sequence	name	part number
1	Gasket	1684
2	First shaft bearing cover gasket	14311
3	Round Magnet	14373
4	PTO bottom window cover	16596
5	Bottom window gasket	16929
6	Clutch housing gasket	20822
7	Spring washer	q40316
8	Transmission housing	12js160t — 1701015
9	Nameplate	12js200t — 1702021—3
10	Stud	c01056
11	Hexagon thin nuts	gb890—80 — m16xl.5
12	Cover	jsl30t — 1701020
13	Clutch housing	jsl80-1601015-6

Edited by CHINA HEAVY TRUCK PARTS STORE CO LTD, www.sinotruk-parts-store.com
Contact: Eric Jin, email: eric@sinotruk-parts-store.com, telephone: 0086 15554163618.

14	Cover	jsl80—1601016—1
15	Cover	jsl80 — 1601016—2
16	Slotted conical plug	q61304
17	First shaft bearing cap	jsl80a — 1701040—3
18	Stud	q1231630
19	Hex head bolt and spring washer assemblies	q1421032
21	Hex head bolts	q150b1025
22	Hex head bolts	q150b1032
23	Hex head bolts	q150b1238
24	Hex head bolts	q150b1290
25	Hexagon head bolt	q170b1032
26	Cross recessed pan head self tapping screws	q2713508
27	Slotted set screws	q2821616
28	Hexagon nuts	q341b16
29	Flat Washers	40112
30	Flat Washers	q40116
31	Spring washer	q40310
32	Spring washer	q40312
33	Oil seal assembly	f500a — 1802191

Edited by CHINA HEAVY TRUCK PARTS STORE CO LTD, www.sinotruk-parts-store.com
Contact: Eric Jin, email: eric@sinotruk-parts-store.com, telephone: 0086 15554163618.

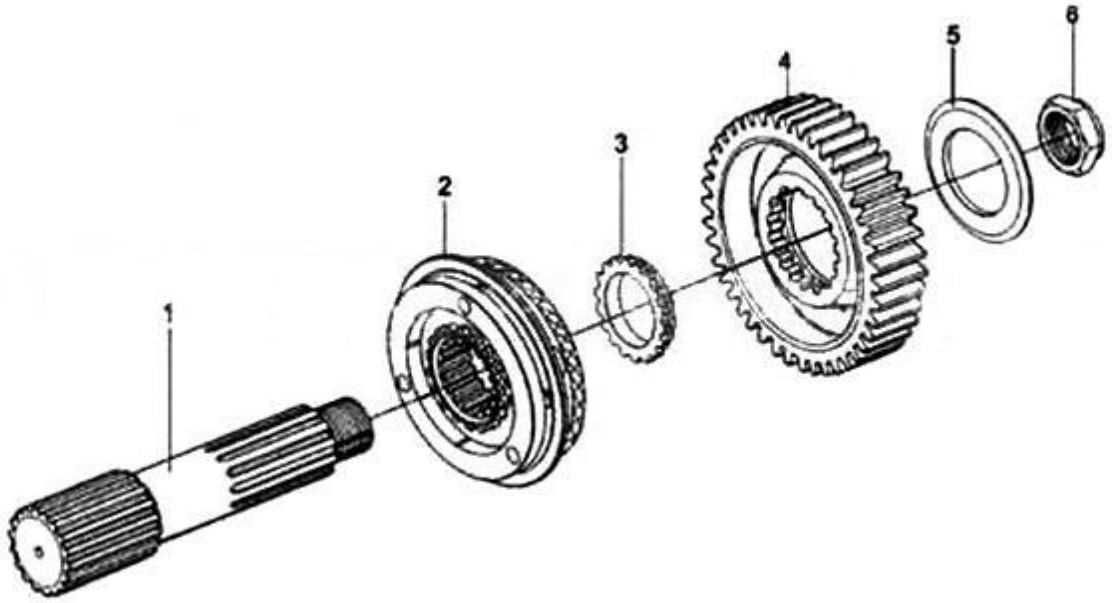

Vice box main shaft		
FAST Transmission 12JS200T		
sequence	name	part number
1	Vice box main shaft	12js200t — 1707105
2	High & low gear synchronizer assembly	12jsl60t — 1707140
3	Vice box main shaft washers	12js200t — 1707107
4	Vice box reduction gear	12js200t — 1707106
5	Vice box main shaft gear plate	12jsl60t — 1707108
6	Flange nut	f96006

Edited by CHINA HEAVY TRUCK PARTS STORE CO LTD, www.sinotruk-parts-store.com
Contact: Eric Jin, email: eric@sinotruk-parts-store.com, telephone: 0086 15554163618.

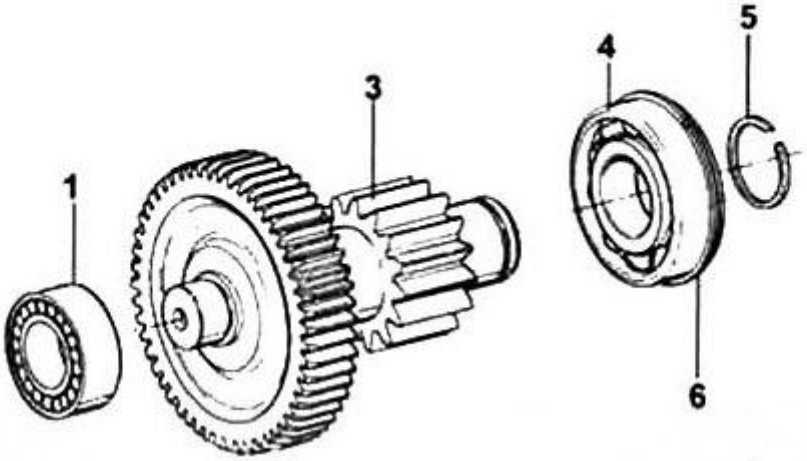

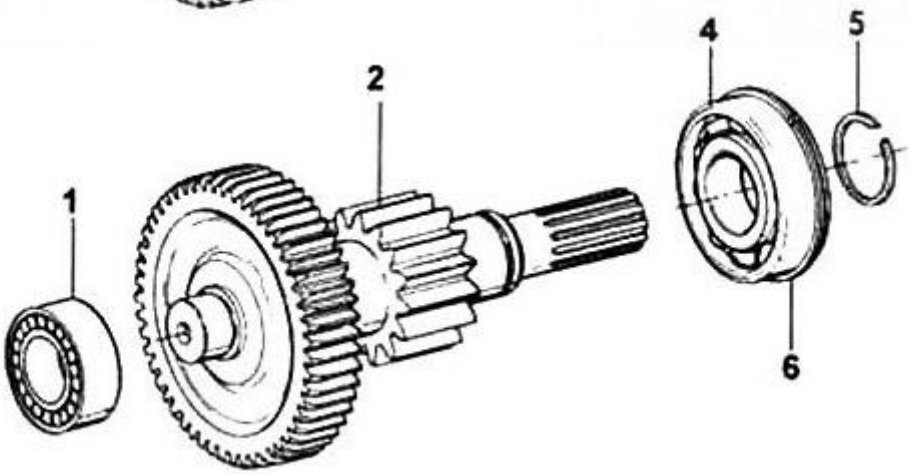

Vice box middle shaft		
FAST Transmission 12JS200T		
sequence	name	part number
1	Cylindrical Roller Bearings	42308e
2	Vice box extended middle shaft	12js200t — 1707047
3	Vice box middle shaft	12js200t — 1707050
4	Cylindrical Roller Bearings	192311e
5	Snap ring	jsl80—1707051
6	Snap ring 120 / 129.7	gb305—82

Edited by CHINA HEAVY TRUCK PARTS STORE CO LTD, www.sinotruk-parts-store.com
Contact: Eric Jin, email: eric@sinotruk-parts-store.com, telephone: 0086 15554163618.

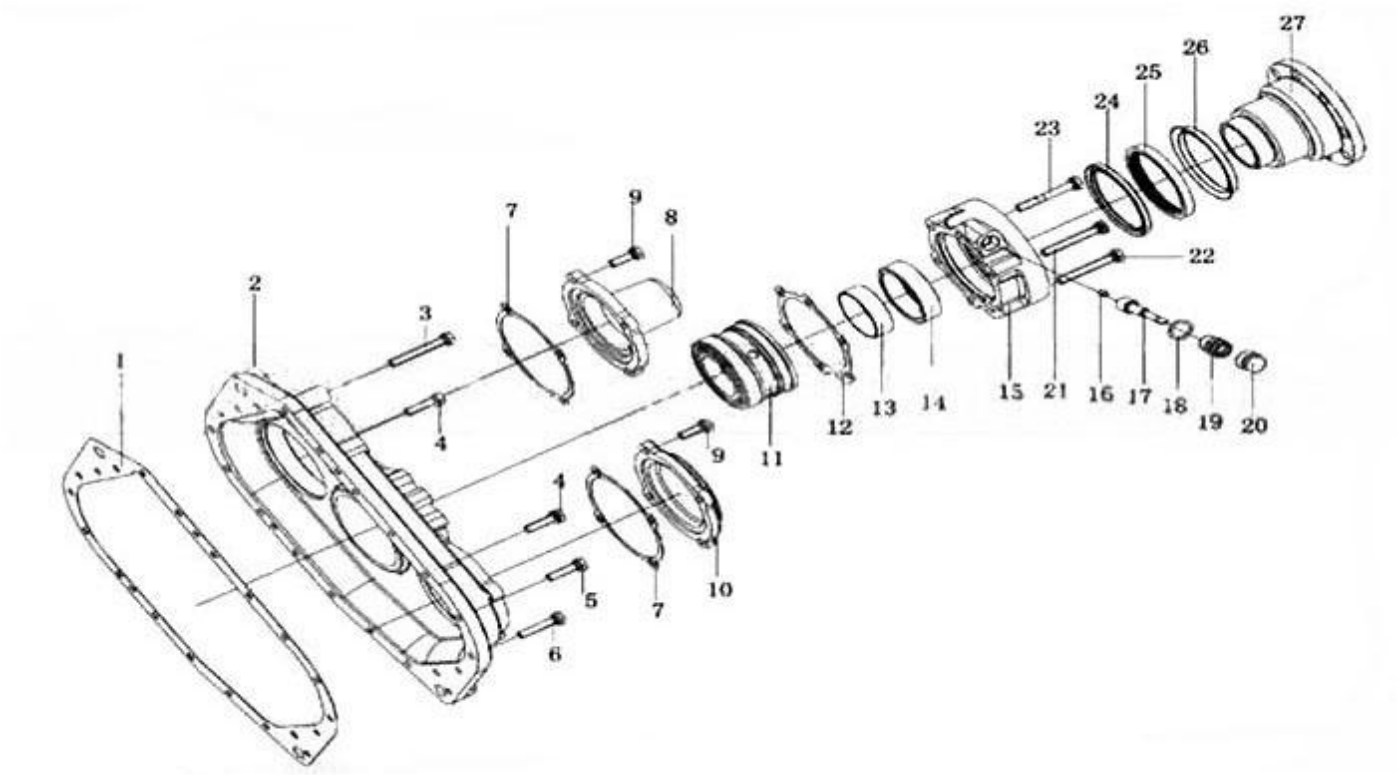

Rear cover		
FAST Transmission 12JS200T		
sequence	name	part number
1	Cover gasket	14335
2	Rear cover case	js220—1707015
3	Hex head bolt and spring washer assemblies	q1421075
4	Hex head bolt spring washer	q1461050
5	Hex head bolt and spring washer	1421040
6	Hex head bolt and spring washer assemblies	q1421050
7	Vice box middle shaft bearing cover gasket	jsl80—1707053
8	Middle shaft cap	10jsl60—1707052
9	Bolt assembly	a—c09008
10	Vice box middle shaft bearing cap	jsl80—1707052
11	Tapered Roller Bearings	js220—1707109
12	Gasket	jsl80—1707156
13	Speedometer drive gear bushing	js220—1707111
14	Speedometer drive gear	f91054
15	Rear output shaft bearing cap	jsl80—1707155
16	Speedometer driven gear bushings	7992

Edited by CHINA HEAVY TRUCK PARTS STORE CO LTD, www.sinotruk-parts-store.com
Contact: Eric Jin, email: eric@sinotruk-parts-store.com, telephone: 0086 15554163618.

17	Odometer driven gear	f91055
18	Gasket	f96005
19	Odometer joint assembly	f93060
20	Odometer protective cover	x11412
21	Hexagon head bolt and spring washer	c09033
22	Hex head bolt and spring washer assemblies	q1421075
23	Bolt assembly	a—c09009
24	Oil seal	c01032
25	Seal	21036
26	Dust cover	f96119
27	Output flange	js220—1707159

Edited by CHINA HEAVY TRUCK PARTS STORE CO LTD, www.sinotruk-parts-store.com
Contact: Eric Jin, email: eric@sinotruk-parts-store.com, telephone: 0086 15554163618.

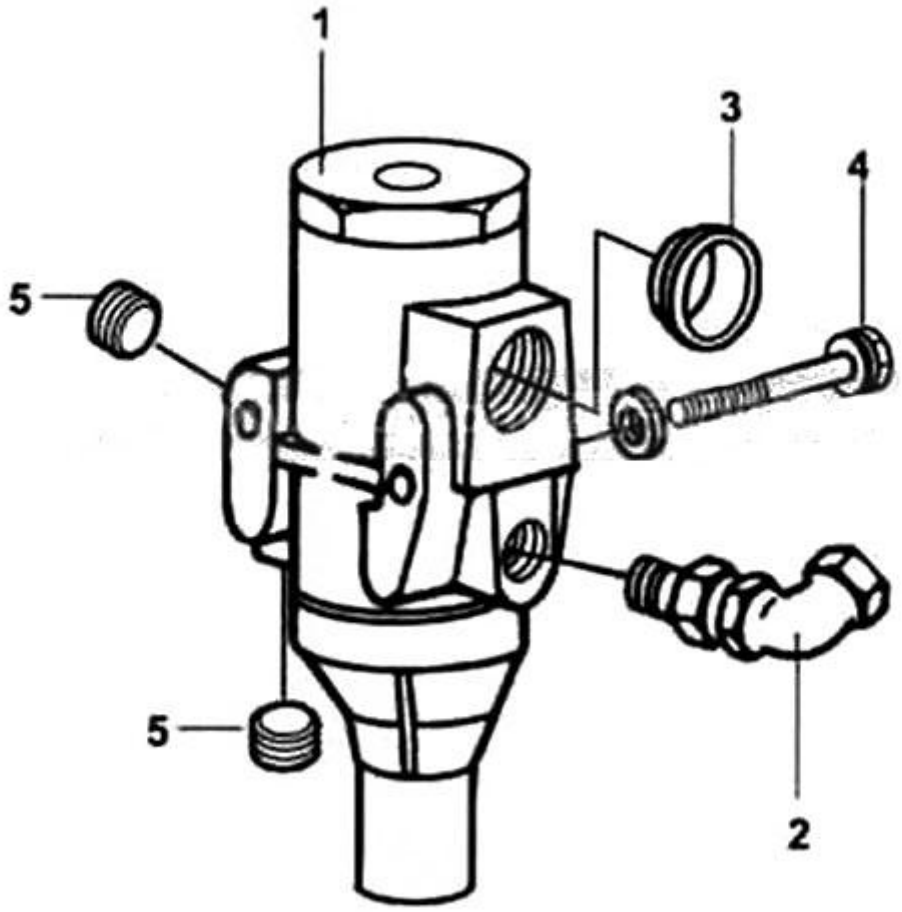

Air filter		
FAST Transmission 12JS200T		
sequence	name	part number
1	Air filter regulator	a-4740-11
2	90 ° elbow joint	12845
3	Plug	54015
4	Hex head bolt and spring washer assemblies	q1420660
5	Hexagon head taper plug	q618b01

Edited by CHINA HEAVY TRUCK PARTS STORE CO LTD, www.sinotruk-parts-store.com
Contact: Eric Jin, email: eric@sinotruk-parts-store.com, telephone: 0086 15554163618.