SINOTRUK HOWO

STEERING

SPARE PARTS CATALOG

Edited and provided by

CHINA HEAVY TRUCK PARTS STORE CO LTD

Edited by CHINA HEAVY TRUCK PARTS STORE CO LTD, www.sinotruk-parts-store.com
Contact: Eric Jin, email: eric@sinotruk-parts-store.com, telephone: +86 15554163618.

INDEX

Steering Control Mechanism	Page 3
4x2 6x4 Hydraulic System	Page 5
8x4 Hydraulic System	Page 8
6x2 Hydraulic System	Page 11
6x2 6x4 Steering Rod	Page 13
8x4 Steering Rod	Page 14

Edited by CHINA HEAVY TRUCK PARTS STORE CO LTD, www.sinotruk-parts-store.com
Contact: Eric Jin, email: eric@sinotruk-parts-store.com, telephone: +86 15554163618.

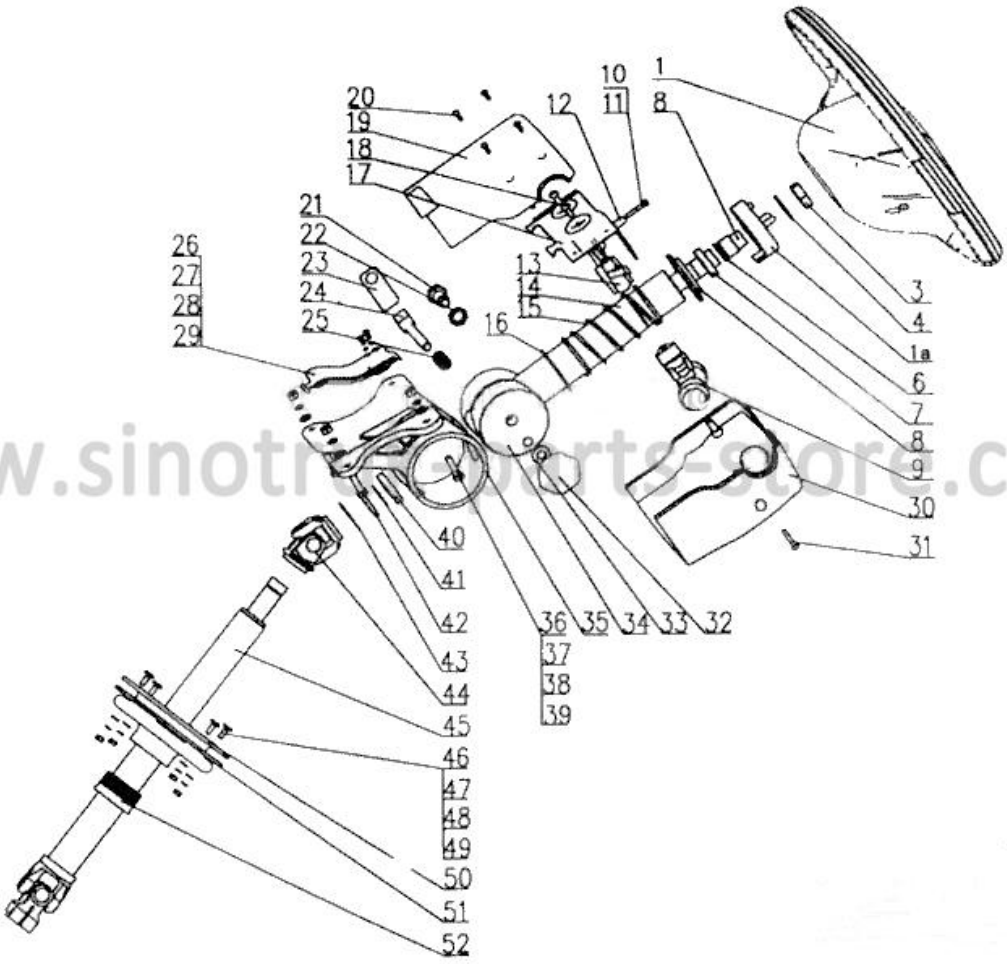

www.sinotruk-parts-store.com

Serial	Name	Name	Part Number
0	转向轴带管柱总成	Steering shaft with pipe assembly	AZ9719470050
1	转向盘	Steering wheel	AZ9719470100
2	接触环	Contact ring	AZ9130583024
3	六角薄螺母	Hexagon thin nut	Q351B22T15
4	波形弹性垫圈	Wave elastic washer	Q41822
6	轴用弹性挡圈	Shaft elastic ring	Q43125
7	深沟球轴承 61905GB/T276-94	Deep groove ball bearings 61905GB/T276-94	AZ9003320012
8	转向轴	Steering shaft	AZ9719470053
9	钥匙起动开关	Key start switch	WG9130583019
10	六角头螺栓	Hex head bolt	Q150B0530
11	1 型六角螺母	Type 1 hex nut	Q340B05
12	滚子	Roller	81.95801.0071
13	固定夹	Securing clip	81.46433.0005
14	转向轴套	Steering sleeve	AZ9719470051
15	压缩弹簧	compressed spring	AZ9123470129
16	薄垫片	Shim	AZ9123470130

Edited by CHINA HEAVY TRUCK PARTS STORE CO LTD, www.sinotruk-parts-store.com
Contact: Eric Jin, email: eric@sinotruk-parts-store.com, telephone: +86 15554163618.

17	支座	Bearing	AZ9100470424
18	六角头螺栓	Hex head bolt	Q150B0865
19	转向柱罩（后部）	Steering column cover (rear)	AZ9719470041
20	十字槽盘头自攻螺钉	Cross recessed pan head tapping screws	Q2720412
21	行程限位螺钉	Travel limit screw	AZ9719470057
22	弹簧垫圈	Spring washer	Q40316
23	弹性压板	Flexible plate	AZ9719470058
24	调整紧固螺栓	Adjust the fastening bolt	AZ9719470055
25	压缩弹簧	compressed spring	AZ9123470153
26	线束固定支架	Wire harness fixing bracket	AZ9719470052
27	六角头螺栓	Hex head bolt	Q150B0408
28	弹簧垫圈	Spring washer	Q40304
29	平垫圈	Flat Washers	Q40104
30	转向柱罩（前部）	Steering column cover (front)	AZ9719470042
31	十字槽盘头自攻螺钉	Cross recessed pan head tapping screws	Q2714250
32	调节手轮	Adjust the handwheel	AZ9123470150
33	垫圈	washer	AZ9123470155
34	转向柱导向套	Steering column guide sleeve	AZ9719470054
35	转向柱安装支座	Steering column mounting bracket	AZ9719470056
36	六角头螺栓	Hex head bolt	Q150B0830
37	1 型六角螺母	Type 1 hex nut	Q340B08
38	弹簧垫圈	Spring washer	Q40308
39	平垫圈	Flat Washers	Q40108
40	深沟球轴承 61806GB/T276-94	Deep groove ball bearings	AZ9003320013
41	轴用弹性挡圈	Shaft elastic ring	Q43130
42	环	ring	81.91710.0459
43	孔用弹性挡圈	Hole elastic ring	Q43042
44	万向节	Universal joint	AZ9719470043
45	转向伸缩轴	Steering extend shaft	AZ9719470044
46	端面凸焊螺栓	Face projection bolt	Q199B0616
47	1 型六角螺母	Type 1 hex nut	Q340B06
48	弹簧垫圈	Spring washer	Q40306
49	平垫圈	Flat Washers	Q40106
50	转向轴护套	Steering shaft sheath	AZ9719470045
51	压板	Pressure plate	AZ9719470046
52	衬套	bushing	AZ9100470410
1a	回位环	Return ring	WG9130583018

Edited by CHINA HEAVY TRUCK PARTS STORE CO LTD, www.sinotruk-parts-store.com
Contact: Eric Jin, email: eric@sinotruk-parts-store.com, telephone: +86 15554163618.

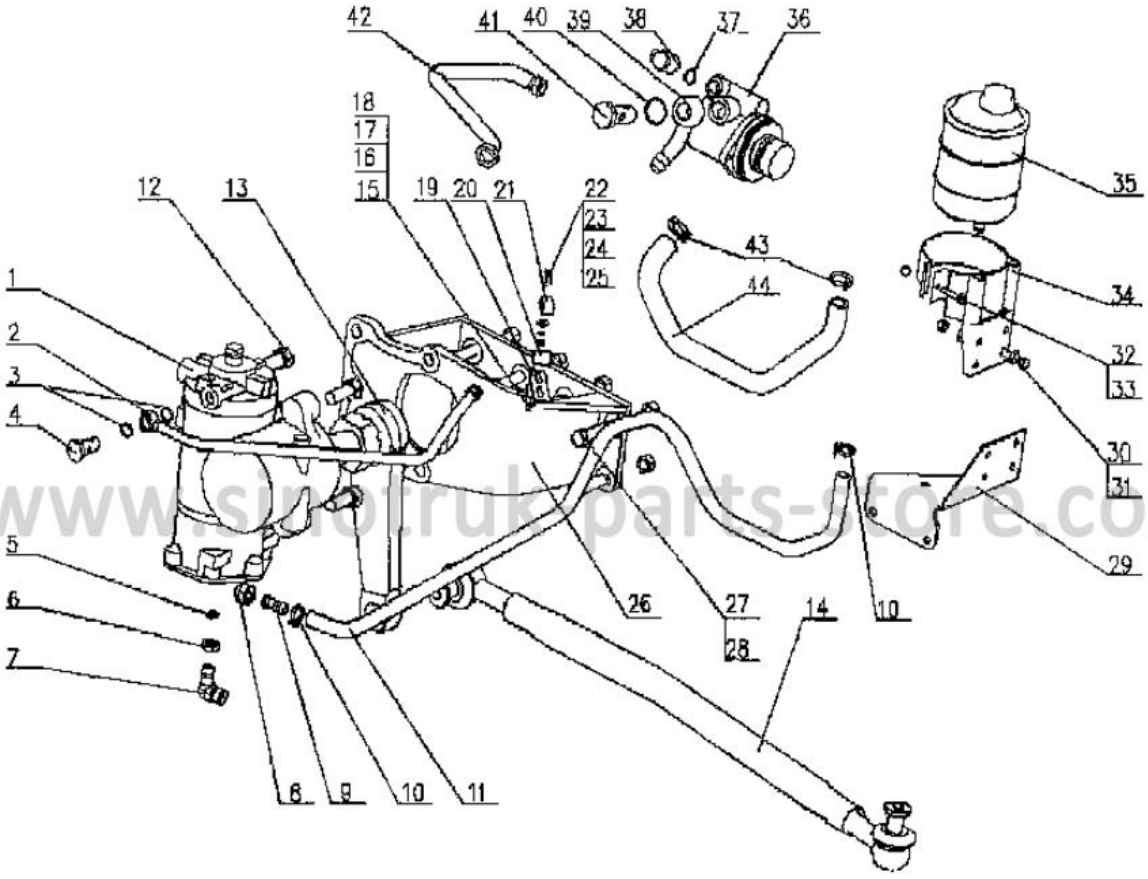

www.sinotruk-parts-store.com

Serial	Name	Name	Part Number
1	ZF8098 动力转向器	ZF8098 power steering gear	AZ9719470228
1	ZF8095 动力转向器	ZF8098 power steering gear	AZ9100470225
1	ZF8098 动力转向器（右置）	ZF8098 power steering gear (right hand steering)	WG9716470150
2	压油管总成	Pressure oil pipe assembly	AZ9719470029
2	压油管总成	Pressure oil pipe assembly	AZ9725470229
2	压油管总成	Pressure oil pipe assembly	AZ9716470050
3	组合密封圈	Combination seal	T071800
4	空心螺栓	Hollow bolt	190003962632
5	密垫圈	Gasket	252-3407054
6	紧固螺母	Fastening nut	252-3407055
7	弯管接头	Elbow joint	252-3407056
8	卡套管接头用螺母	Tube connector nut	190003883242
9	软管接头	Hose connector	WG9100470078
10	软管卡箍	Hose clamp	190003989336
11	带纤维夹层的橡胶软管	Rubber hose	WG9725470050
11	带纤维夹层的橡胶软管	Rubber hose with fiber sandwich	AZ9716470060

Edited by CHINA HEAVY TRUCK PARTS STORE CO LTD, www.sinotruk-parts-store.com
Contact: Eric Jin, email: eric@sinotruk-parts-store.com, telephone: +86 15554163618.

12	六角头螺栓	Hex head bolt	Q151B2045TF2
13	转向摇臂	Steering rocker	WG9719470020
13	转向摇臂	Steering rocker	WG9725470298
13	转向摇臂（右置）	Steering rocker	WG9716470020
15	六角头螺栓	Hex head bolt	Q150B0630
16	1 型六角螺母	Hex nut	Q340B06
17	大垫圈	Large washer	Q40206
18	弹簧垫圈	Spring washer	Q40306
19	角形支架	Angle bracket	1397350169
20	绝缘套管	Insulation sleeve	190003489292
21	一端固定式单管夹片	One-end fixed single pipe clip	Q68225
22	六角头螺栓	Hex head bolt	Q150B0620
23	1 型六角螺母	Hex nut	Q340B06
24	弹簧垫圈	Spring washer	Q40306
26	转向器支架	Steering bracket	AZ9731470020
26	转向器支架	Steering bracket	AZ9725470295
26	转向器支架（右置）	Steering bracket (right)	AZ9725470238
27	六角头螺栓（细牙）	Hexagon head bolts (fine teeth)	Q151B1660TF2
28	自锁螺母	Self-locking nuts	190003888627
29	支架总成	Bracket assembly	AZ9725470025
29	支架总成	Bracket assembly	AZ9725470020
30	六角头螺栓	Hex head bolt	Q151B1020
31	2 型全金属六角锁紧螺母	Hexagon lock nut	Q33210
32	六角头螺栓	Hex head bolt	Q150B0835
33	螺母	Nuts	Q33208
34	转向油罐支架总成	Steering tank bracket assembly	AZ9100470040
34	支架总成	Bracket assembly	AZ9100470049
35	转向油罐	Steering tank	WG9719470033
36	转向助力叶片泵	Steering pump (right hand steering)	WG9719470037
36	转向助力叶片泵	Steering pump	WG9619470080
36	转向助力叶片泵	Steering pump	WG9631470060
37	组合密封垫	Combination seal	T071800
38	旋转管接头总成	Rotary pipe joint assembly	WG9100470110
39	环状接头	Ring joint	WG9100470076
40	密封垫圈	Sealing washer	190003098031
41	空心螺栓	Hollow bolt	190003962651
42	高压软管	high-pressure hose	WG9100470107
42	高压软管	high-pressure hose	WG2032470140
42	高压软管	high-pressure hose	AZ9716470070
43	软管卡箍	Hose clamp	190003989301
44	成型软管	Forming hose	WG9725470120

Edited by CHINA HEAVY TRUCK PARTS STORE CO LTD, www.sinotruk-parts-store.com
Contact: Eric Jin, email: eric@sinotruk-parts-store.com, telephone: +86 15554163618.

44	成型软管	Forming hose	AZ9725470175
11a	弹簧护套	Spring jacket	17017470015
36a	密封垫	Gasket	161800130047
36b	内六角螺钉	Socket head cap screws	Q218B1025
36c	内六角螺钉	Socket head cap screws	Q218B1035
44a	弹簧护圈	Spring retainer	AZ9725470084
44b	护套	jacket	AZ9123360300

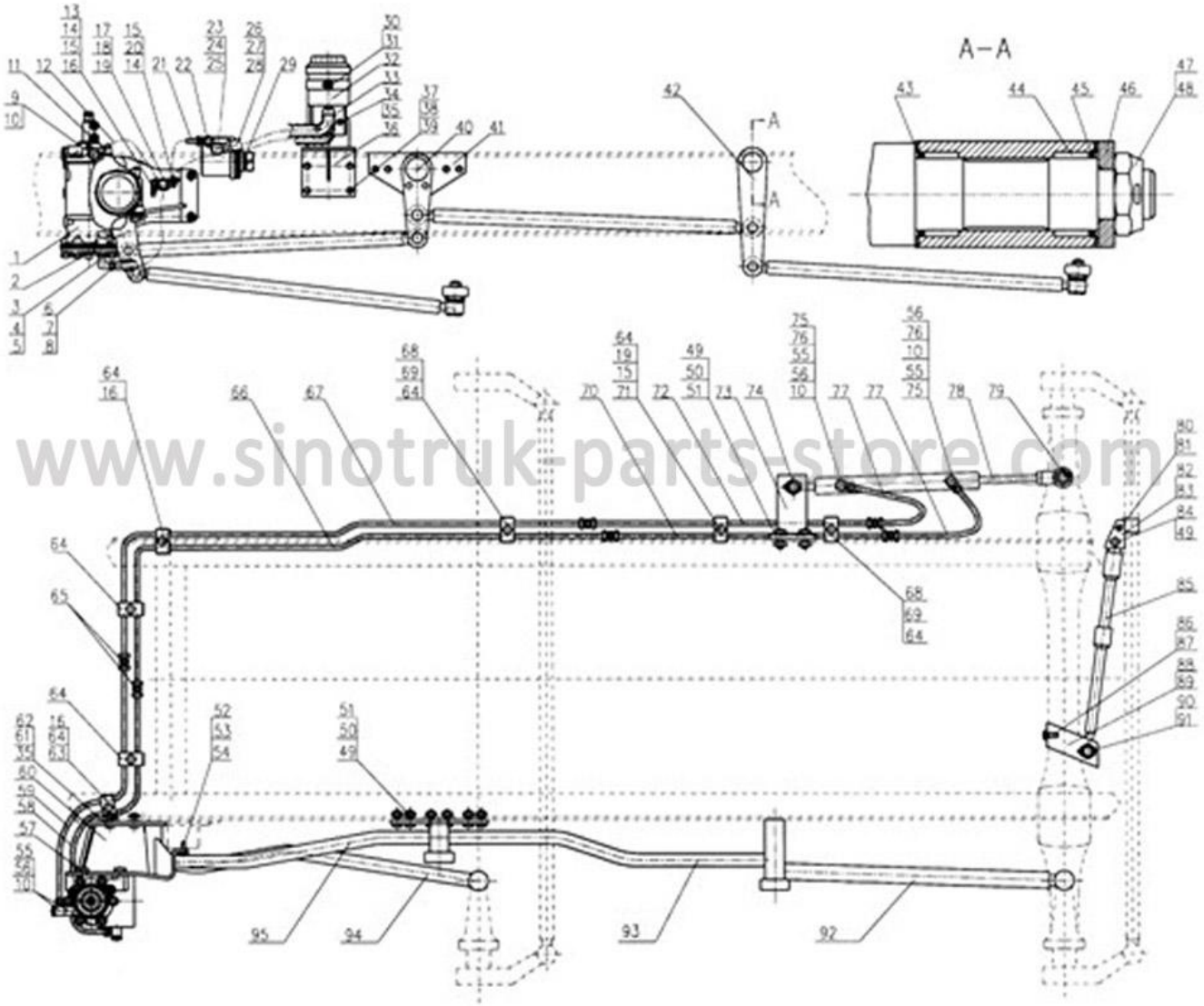

NO.	Part number	Name
1	AZ9719470228	The steering mechanism ZF8098
2	WG9118470051	Steering fry
3	252? 3407054	Gland seal
4	252? 3407055	Fastening nut
5	252? 3407056	Socket-gon
6	WG9100470078	Clutch Hose
7	190003989336	Hose clamp
8	190003883242	Nut for fitting
9	190003962632	Hollow bolt

Edited by CHINA HEAVY TRUCK PARTS STORE CO LTD, www.sinotruk-parts-store.com
Contact: Eric Jin, email: eric@sinotruk-parts-store.com, telephone: +86 15554163618.

10	T071800	Multiple gland seal
12	WG9719470029	Gidroshlang assembly
13	Q150B0620	Bolt
14	Q40306	Spring washer
15	Q340B06	Nut
16	139735169	Corner Bracket
17	138091360181	Tube-holder
18	161000060211	code init?? 0Rezinovy shlan
20	Q40206	Washer
21	WG9100470107	High pressure hose
22	199100470110	Connection
23	WG9100470076	Connection head
24	190003962651	Hollow bolt
25	190003098031	Sealing washer
26	WG9725470120	Shaped hose
27	AZ9100470084	The protective ring spring
28	190003989301	Hose Clamps
29	WG9719470037	Hydraulic pumps， hydraulic
30	Q150B0835	Bolt
31	Q33208	Keeper
32	WG9719470033	Hydraulic Tank
33	AZ9100470040	Bracket hydraulic tank assembly
41	AZ9731470035	The support plate assembly
42	WG9018470016	Lever assembly
43	199018470014	Disc Bearing
44	WG90410228	Needle bearing (NK4020A)
73	199018510018	Bracket assembly
74	AZ9118470024	Ball socket assembly
75	Q80114	Nut fitting
77	WG2032470140	High pressure hose assemblies
78	WG9014470008	Ram
79	AZ9118470025	Ball socket assembly

Edited by CHINA HEAVY TRUCK PARTS STORE CO LTD, www.sinotruk-parts-store.com
Contact: Eric Jin, email: eric@sinotruk-parts-store.com, telephone: +86 15554163618.

86	WG9114470106	Absorber
89	199118470033	Steel corner assembly
90	Q271B14	Nut slot

Edited by CHINA HEAVY TRUCK PARTS STORE CO LTD, www.sinotruk-parts-store.com
Contact: Eric Jin, email: eric@sinotruk-parts-store.com, telephone: +86 15554163618.

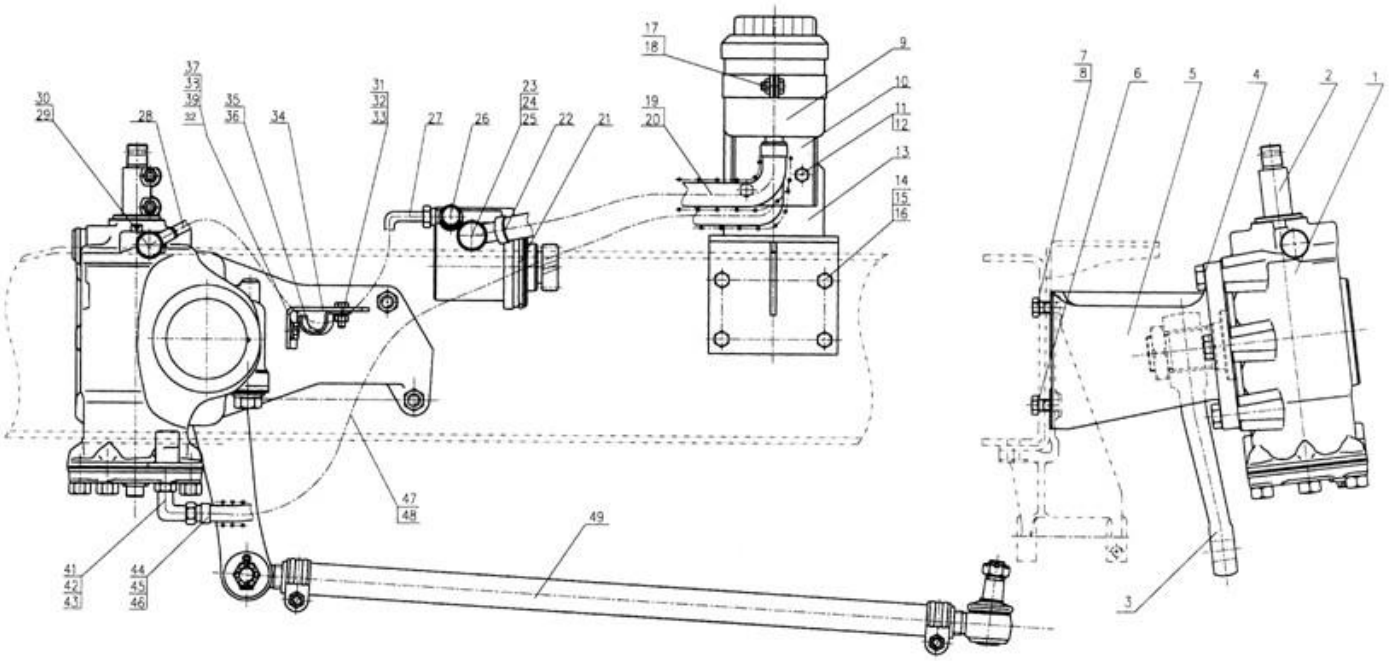

Seq.	Part Number	Need	Name	Name
1	AZ9719470228	1	Steering gear(ZF8098)	ZF 8098 动力转向器
3	WG9719470020	1	Drop arm	转向摇臂
4	Q151B2045TF2	5	Screw	六角头螺栓
5	AZ9731470020	1	Steering bracket	转向器支架
6	Q151B1660TF2	5	Screw	六角头螺栓（细牙）
8	190003888627	5	Nut	自锁螺母
9	Q81714	3	Tie-in	卡套式铰接接头体
10	Q81818	3	Screw	卡套式铰接六角螺栓
11	T071800	6	Gasket	组合密封圈
12	Q80014	6	Ring	卡套
13	Q80114	6	Nut	卡套式管接头用螺母
14	Q80414	6	Tie-in	卡套式端直通接头体
15	AZ9725470091	1	Steel tube	钢管
15a	AZ9725470092	1	Steel tube	钢管
16	AZ9725470093	1	Steel tube	钢管
16a	AZ9725470094	1	Steel tube	钢管
17	Q80314	2	Tie-in	卡套式直通接头体
18	WG9725470060	1	Oil tank C	动力转向油罐
19	AZ9725470040	1	Bracket assembly	支架总成

Edited by CHINA HEAVY TRUCK PARTS STORE CO LTD, www.sinotruk-parts-store.com
Contact: Eric Jin, email: eric@sinotruk-parts-store.com, telephone: +86 15554163618.

20	Q150B1020	4	Screw	六角头螺栓
21	Q33210	4	Nut	2 型全金属六角锁紧螺母
26	Q150B0835	1	Screw	六角头螺栓
27	Q33208	1	Nut	2 型全金属六角锁紧螺母
28	190003989301	2	Hose clamp	软管卡箍
29	WG9725470120	1	Hose	成型软管
30	AZ9725470084	1	Spring protect ring	弹簧护圈
31	WG9719470037	1	Hydraulic pump	转向助力叶片泵
31	WG9631470060	1	Hydraulic pump	转向助力叶片泵
32	AZ9725470090	1	Hight pressure hose	高压软管
32a	AZ9725470097	1	Hight pressure hose	高压软管
33	AZ9160470090	1	Tie-in	接头体
34	190003098031	2	Gasket	密封垫圈
35	WG9719470029	1	Steel tube	压油管总成
36	Q150B0620	4	Screw	六角头螺栓
37	Q40306	5	Spring washer	弹簧垫圈
38	Q340B06	5	Nut	1 型六角螺母
39	1397350169	1	Angle	角形支架
40	138091360181	1	Clamp	管夹
41	161000060211	1	Rubber hose	橡胶软管 15/21
42	Q150B0630	4	Screw	六角头螺栓

Edited by CHINA HEAVY TRUCK PARTS STORE CO LTD, www.sinotruk-parts-store.com
Contact: Eric Jin, email: eric@sinotruk-parts-store.com, telephone: +86 15554163618.

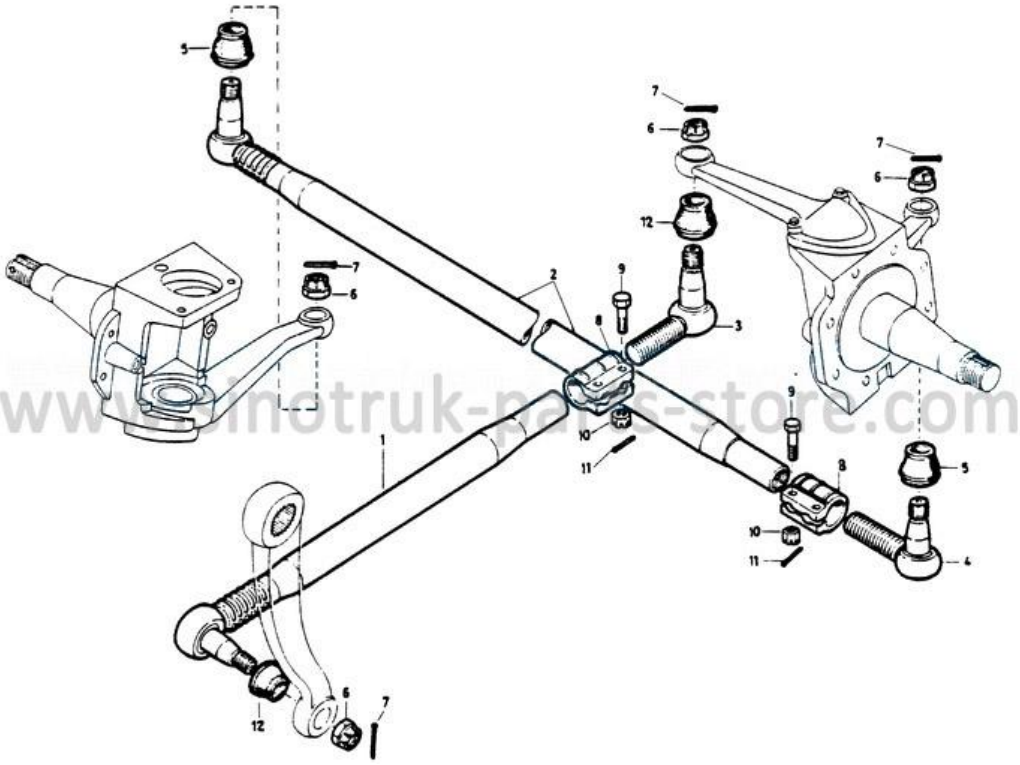

NO.	Part number	Name
1	AZ9719430010	Longitudinal steering rod assembly
2	AZ9112430003	Transverse steering rod assembly
6	Q387B20T15	Low nut with a slot
7	Q50040036	Cotter

Edited by CHINA HEAVY TRUCK PARTS STORE CO LTD, www.sinotruk-parts-store.com
Contact: Eric Jin, email: eric@sinotruk-parts-store.com, telephone: +86 15554163618.

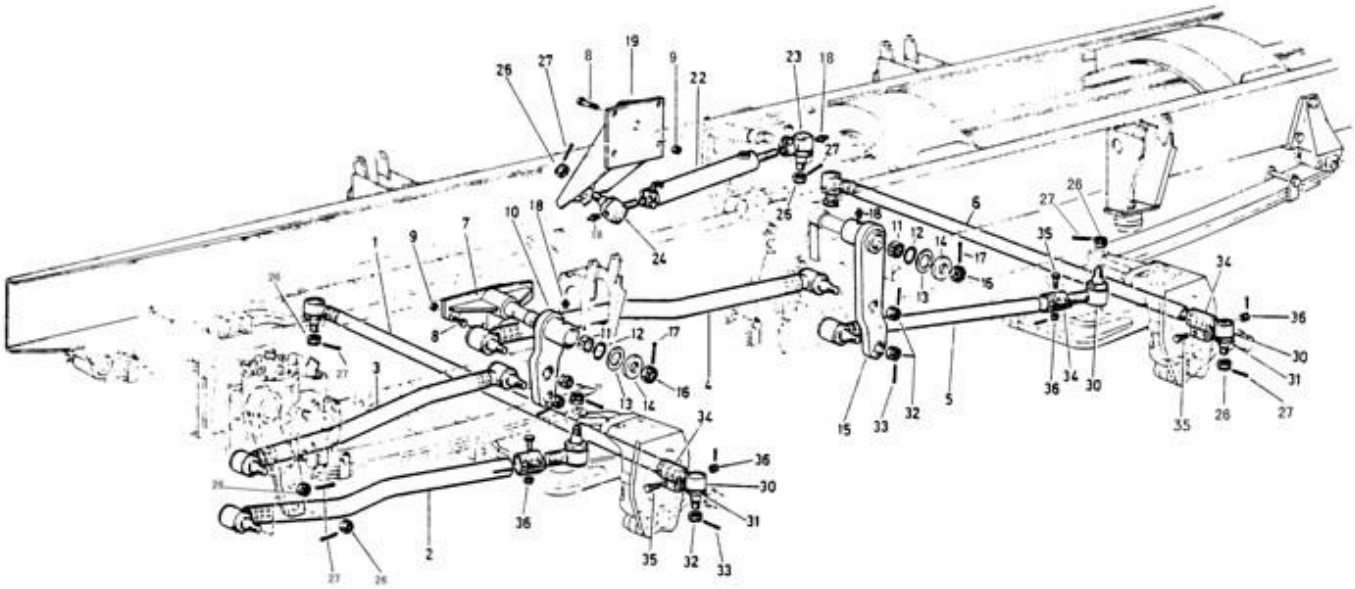

NO.	Part number	Qty	Name	Name
1	11031430066	1	Drag link	转向横拉杆
2	AZ9731430010	1	Drag link	转向直拉杆
3	AZ9731430020	1	Drag link	转向中间拉杆
4	AZ9731430030	1	Drag link	转向中间拉杆
5	AZ9731430040	1	Drag link	转向直拉杆
6	AZ9731430002	1	Tie rod	转向横拉杆带夹箍总成
7	AZ9731470035	1	Support plate	支板总成
8	Q151B1445	6	Screw	六角头螺栓
9	Q33014	6	Lock nut	自锁螺母
10	AZ9731470030	1	Lever	柄杆总成
11	WG90 410228	4	Needle bearing	滚针轴承（HK4020A）
12	1880340023	4	O-ring	0 形密封圈
13	199018470014	4	Washer	轴承垫圈
14	199018470015	2	Washer	垫圈
15	WG018470016	1	Lever	柄杆总成
16	190003872383	2	Castle nut	六角槽形扁螺母
17	Q5006350	2	Split pin	开口销

Edited by CHINA HEAVY TRUCK PARTS STORE CO LTD, www.sinotruk-parts-store.com
Contact: Eric Jin, email: eric@sinotruk-parts-store.com, telephone: +86 15554163618.

18	19000396612	2	Grease nipple	滑脂嘴
19	199018510018	1	Blacket	托架总成
20	Q151B1445	4	Screw	六角头螺栓
21	Q33014	2	Lock nut	自锁螺母
22	WG9014470008	1	Operating cylinder	动力缸
23	AZ9118470025	1	Ball joint C	球接头总成
24	AZ9115470024	1	Ball joint C	球接头总成
25	190003963112	1	Grease nipple	滑脂嘴
26	Q387B20T15	1	Castle nut	六角开槽薄螺母
27	Q5004036	1	Split pin	开口销
32	Q387B20T15	2	Castle nut	六角开槽薄螺母
33	Q5004036	2	Split pin	开口销
34	199118470037	1	Clamp	夹紧环箍
35	Q151C1255	1	Screw	六角头螺栓
36	Q341C12	1	Lock nut	六角螺栓

Edited by CHINA HEAVY TRUCK PARTS STORE CO LTD, www.sinotruk-parts-store.com
Contact: Eric Jin, email: eric@sinotruk-parts-store.com, telephone: +86 15554163618.